A Cutting-Edge Zero Emissions Product

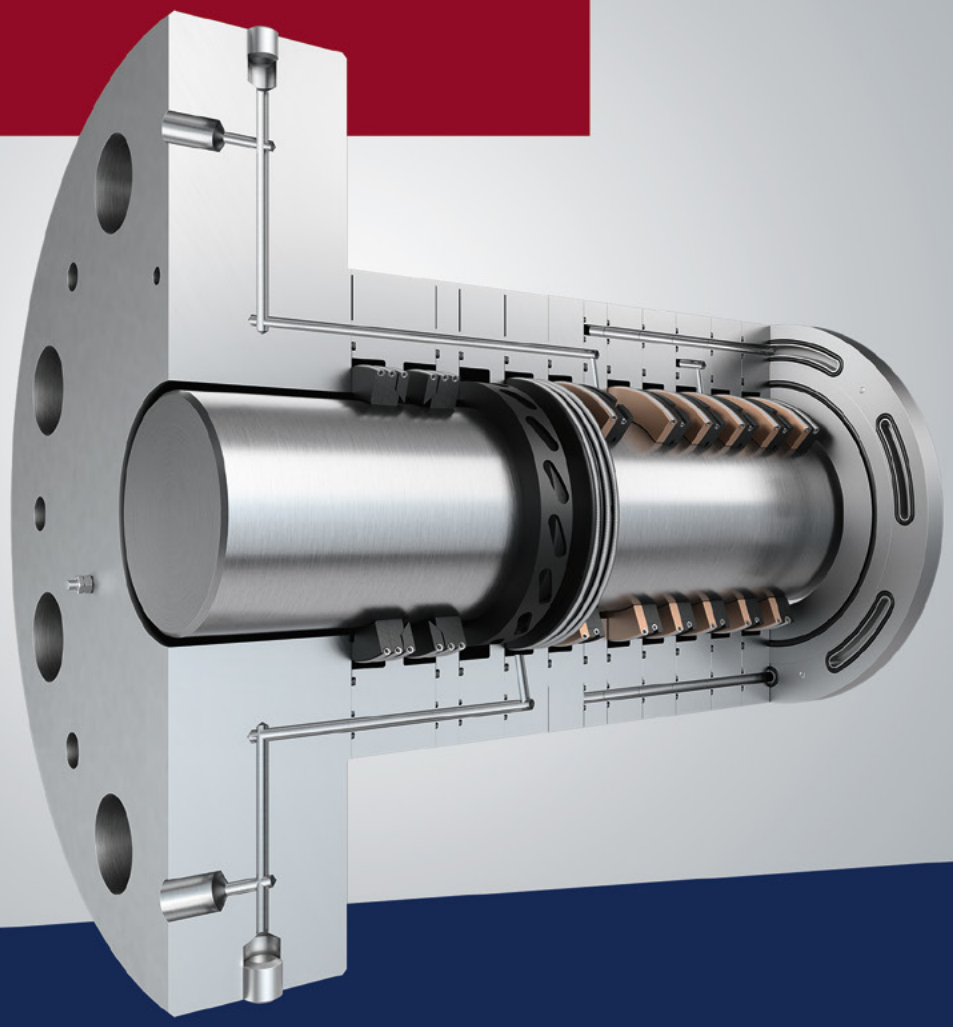

EmissionShield

Static Rod Sealing System

Stop emissions during standby

HOERBIGER

Effectively eliminate vented emissions

Conventional rod seals and packing cases are designed to seal gas inside the compressor during operation, but during standby, conventional packing will allow pressurized gas to leak out of the compressor. Gas contained in the cylinders, volume bottles, heat exchanges, piping and other auxiliary devices is either blown down or is slowly depressurized to the atmosphere. In many cases this gas is vented directly to the atmosphere rather than burned via flaring. This is both a loss of potential revenue and a serious environmental problem. With EmissionShield, these vented emissions are effectively eliminated.

Self-activation makes it easy

Because the EmissionShield is self-activated and does not require an external control panel or pressurized gas to activate, it is substantially easier to operate, and eliminates the need for expensive and difficult-to-use conventional shutdown seals.

Reliable and easy to use for your emissions reduction goals

Our static rod sealing system is much more robust and reliable than conventional shutdown seals, because it does not have moving parts. It is not susceptible to dirt in the packing. It does not break and damage the other packing rings or the piston rod, even if used incorrectly. It can be used with any compressor, but is most beneficial for compressors that are intermittently in service or kept on pressurized standby. In combination with our ECP (Emissions Control Panel), EmissionShield is the key to enable net-zero operations in compression.

> Using EmissionShield, we were able to measure a 97% reduction in our compressor's vented emissions. In terms of the compressor's total CO2 equivalent footprint, this corresponds to a 25% reduction.

Electric Power Plant, Italy

0% leakage

during standby
once seal is active

3,400 t CO2eq savings

per year. Calculation is based on EmissionShield systems in operation in 2024.

3 years

of proven operation without maintenance

Product description

Vent line
Always open for safety purposes

← to vent

EmissionShield Valve

SBS – Standby Seal Packing Ring
Thermally activated at standby

EmissionShield Vent Line
Closed during standby

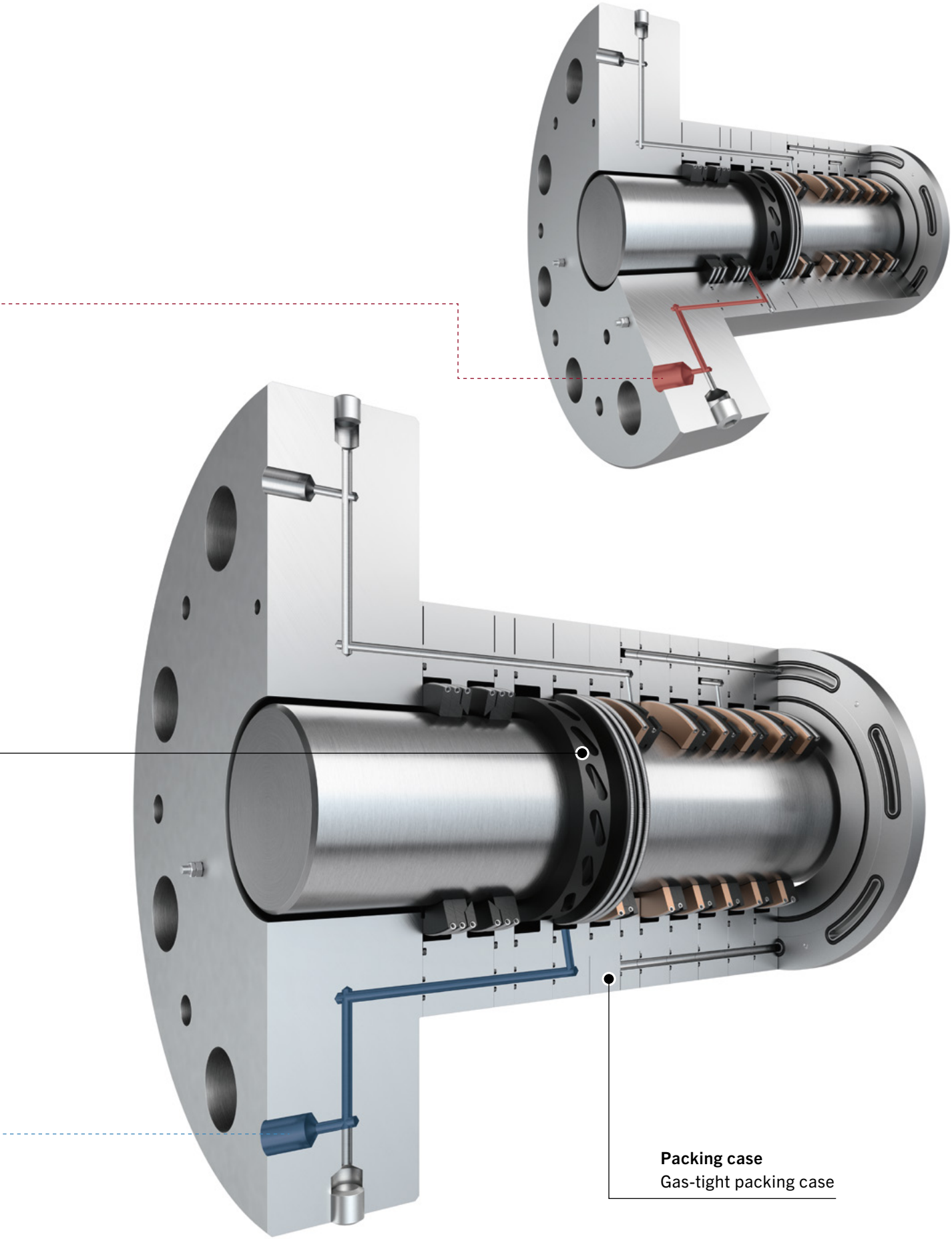
Packing case
Gas-tight packing case

How does it work?

1 The EmissionShield packing is mounted on the rod, and is immediately gas-tight following installation.

2 When the compressor starts, friction causes the piston rod and packing case to heat up. This temperature increase causes the Standby Seal Ring (SBS) to react and expand off of the rod.

3 While the compressor is running, the EmissionShield Valve is open to allow the EmissionShield Vent Line to control the gas which escapes through the packing rings/case. The traditional vent line in the packing case remains open at all times, guaranteeing the safe evacuation of gas from the packing case in case of any faulty activation of the valve.

4 When the compressor stops, the EmissionShield Valve closes. Within a few minutes, the piston rod begins to cool, and the Standby Seal Ring contracts, creating a tight seal against the rod. At this time, the EmissionShield packing system is activated, preventing vented and fugitive emissions.

5 Seconds before the compressor restarts, the EmissionShield Valve opens, relieving the Standby Seal Ring from cylinder pressure and allowing it to deactivate within a few minutes from restart.

Your benefits at a glance

Features	Advantages	Benefits
Gas-tight packing case design	Eliminates cup-to-cup leakage, allowing the compressor cylinders to remain pressurized indefinitely	Reduces emissions as the compressor can be utilized intermittently or kept on hot standby when needed with virtually zero gas loss
Single piece static seal ring	No mechanical components or moving parts inside the packing case or in contact with rod	Increases compressor reliability as the SBS Ring is not impacted by debris and does not wear out while the compressor is running
Thermally activated static seal ring	Does not require alternate activation medium (gas/hydraulic) or costly control panel	Reduces installation cost and time through simple plug and play design
Motorized EmissionShield Valve with spring-loaded mechanism and feedback signal	Available for 24 VDC or 110-240 VAC supply	Increases safety as the fail-safe valve design will vent the compressor in case of electrical failure
	Class 1 Div.2 and ATEX Zone 2 certified	Ideal for all compressor types – rugged design is optimized for different environments
	Feedback signal can be used for system monitoring and diagnostics	Improves compressor reliability as the DCS will signal malfunctions before they can damage the equipment

Learn more by visiting
www.hoerbiger.com/emissionshield
today!

Contact us via email
c-globalmarketing@hoerbiger.com

Locally close to the customers – globally successful: HOERBIGER is active worldwide in 43 countries on all continents. 5,948 employees at 127 locations – including 25 production plants – deliver reliable solutions for better performance, increased safety, and fewer emissions. In 2022, they generated sales of 1.267 billion euros. For renowned customers from the energy sector, the process industry, the automotive industry, the mechanical engineering industry, safety technology, and the electronics industry, performance-determining products and services from HOERBIGER make the difference. With innovations for decarbonization and energy transition, HOERBIGER is already enabling change today for a better tomorrow. As majority shareholder, the HOERBIGER Foundation preserves the 128-year-old entrepreneurial heritage and guarantees stability, independence, and a future-oriented strategy.

HOERBIGER.COM

All rights reserved. Subject to change without notice © Copyright HOERBIGER 2025

05 2025

HOERBIGER